NextGen Components,Inc.

PART CODE: **CR1206FB3K9S01**

SPECIFICATION SHEET

SPECIFICATION SHEET NO.	P0519- CR1206FB3K9S01
DATE	May 19, 2022
REVISION	A0
DESCRIPITION	Thick Film Chip Resistors, 1206(3216 Metric) Series, L3.10*W1.60*H0.60mm, Tolerance: +/-1%, Resistance 3.9 Kohm, Dissipation 1/4W Max. Operating Temp. Range -55°C ~+155°C Package in Tape/Reel, 5,000pcs/Reel RoHS/RoHS III compliant
CUSTOMER	
CUSTOMER PART NUMBER	
CROSS REF. PART NUMBER	
ORIGINAL PART NUMBER	Aillen CR06FB3K9
PART CODE	CR1206FB3K9S01

VENDOR APPROVE			
Issued/Checked/Approved	NextGen Components, Inc. Mandy Xu	NextGen Components, Inc. Ruby Zhang	NextGen Components, Inc. Jack Zhang
DATE: May 19, 2022			

CUSTOMER APPROVE
DATE:

THICK FILM CHIP RESISTORS 1206 SERIES

MAIN FEATURE

- High Reliability And Stability
- Reduced Size Of Final Equipment
- Lower Assembly Costs
- Higher Component And Equipment Reliability
- RoHS III Compliant And Halogen Free Products

APPLICATION

- Consumer Electrical Equipment
- EDP, Computer Application
- Telecom Application

RFQ
Request For Quotation

PART CODE GUIDE

CR	1206	F	B	3K9	S	01
1	2	3	4	5	6	7

1) **CR**: Product code for Thick Film Chip Resistors

2) **1206**: Series Code, 1206 (3216 Metric) Series, Dimensions L3.10*W1.60*H0.60mm

3) **F**: Resistance Range Tolerance Code, P: Jumper; B: +/-0.1%; D: +/-0.5%; F: +/-1%; J: +/-5%

4) **B**: Package Code, A: 4Kpcs/Reel; B: 5kpcs/Reel; C: 10kpcs/Reel; M: 15kpcs/Reel; D: 10kpcs/10” Reel; E: 20kpcs/10” Reel

5) **3K9**: Resistance value code. 0R: 0ohm; 1R2: 1.2ohm; 15R: 15ohm; 20R: 20ohm; 51R: 51ohm; 240R: 240ohm; 1K: 1Kohm; 10K: 10Kohm; 15K: 15 Kohm; 3K9: 3.9 kohm; 6K19: 6.19 Kohm; 9K31: 9.31Kohm; 10K5: 10.5Kohm; 1K21: 1.21 Kohm; 100K: 100Kohm; 226K: 226Kohm; 1M: 1.0Mohm; 1M2: 1.2Mohm

6) **S**: SMD type code

7) **01**: Internal control code, 1~3 digits or letter; Blank: N/A

DIMENSION (Unit: mm)

Image for reference

General Marking:
4 Digits

1206

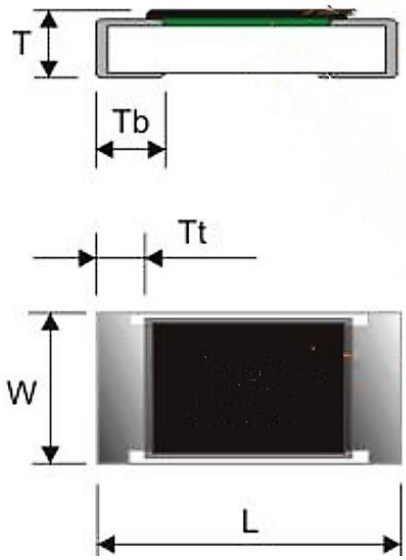

Item	Dimension
L	3.10±0.10
W	1.60±0.10
T	0.60±0.15
T b	0.45±0.20
T t	0.50±0.20

Resistors Construction
For Reference

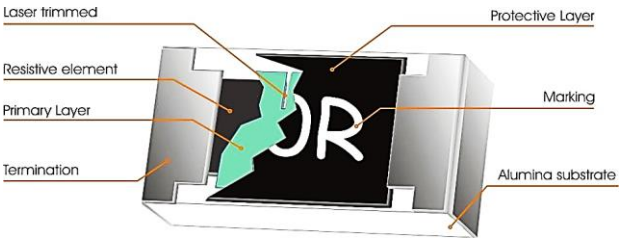

Recommended
Solder Pad

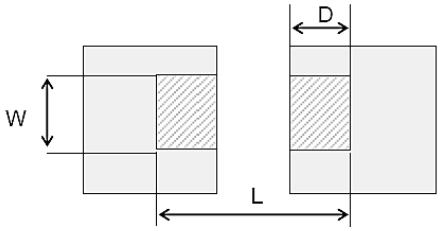

Item	Dimension
W	2.00~2.40
L	4.40~5.00
D	1.20~1.80

GENERAL ELECTRONICAL CHARACTERISTICS

Item		Unit	Symbol	Characteristic	Condition
Product Name			CR	Thick Film Chip Resistors	
Size			1206	1206 (3216 Metric) Series, Dimensions L3.10*W1.60*H0.60mm	
Resistance Range		Ω		3.9K	
Resistance Tolerance			F	+/-1%	
TCR	**10MΩ≥R > 10Ω**	ppm/°C		≤±100	
	R≤10Ω			-200~+400	
Max. Dissipation		W		1/4	@ Tamb=70°C
Operating Temperature		℃		-55 ~+155	
Max. Operation Voltage		V		200	@DC or RMS
Max. Overload Voltage		V		400	@DC or RMS

TEST CONDITION FOR JUMPER (0 Ω)

Item	Unit	Symbol	Characteristic	Condition
Power Rating At 70℃	W		1/4	
Max. Resistance	mΩ		50	
Rated Current	A		2.0	
Peak Current	A		5.0	
Operating Temperature	℃		-55 ~+155	

Note

1) This is the maximum voltage that may be continuously supplied to the resistor element, see "IEC publication 60115-8"

2) Max. Operation Voltage : So called RCWV (Rated Continuous Working Voltage) is determined by

RCWV = $\sqrt{Rated\ Power \times Resistance\ Value}$ or Max. RCWV listed above, whichever is lower.

GENERAL CHARACTERIZATION

Standard values of nominal resistance are taken from the E24 & E96 series for resistors with a tolerance Of +/-0.1%, +/-0.50, +/-1%, +/-5%, The values of the E24/E96 series are in accordance with “IEC publication 60063”

Derating: The power that the resistor can dissipate depends on the operating temperature; see Fig.1

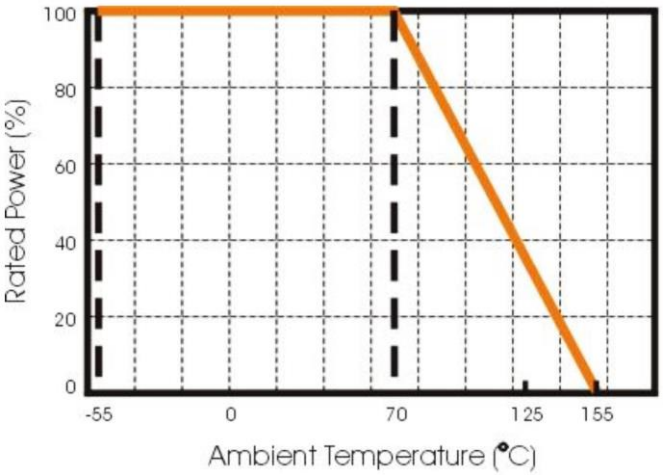

Fig 1 Maximum dissipation in percentage of rated power as a function of the ambient temperature for CR1206

STORAGE AND HANDLING CONDITIONS

1) Products are recommended to be used up within two years since operation date as ensured shelf life.

Check solderability in case shelf life extension is needed.

2) To store products with following condition: Temperature : 5 to 40℃ Humidity: 20 to 70% relative humidity

3) Don't store products in a corrosive environment such as sulfide, chloride gas, or acid. It may cause oxidization of electrode, which easily be resulted in poor soldering b.To store products on the shelf and avoid exposure to moisture. Don't expose products to excessive shock, vibration, direct sunlight and so on.

REFLOW SOLDERING CONDITION

The robust construction of chip resistors allows them to be completely immersed in a solder bath of 260 ℃ for 10 seconds. Therefore, it is possible to mount Surface Mount Resistors on one side of a PCB and other discrete components on the reverse (mixed PCBs). Surface Mount Resistors are tested for solderability at 235 ℃ during 2 seconds. The test condition for no leaching is 260℃ for 30 seconds. Typical examples of soldering processes that provide reliable joints without any damage are given in Fig 2.

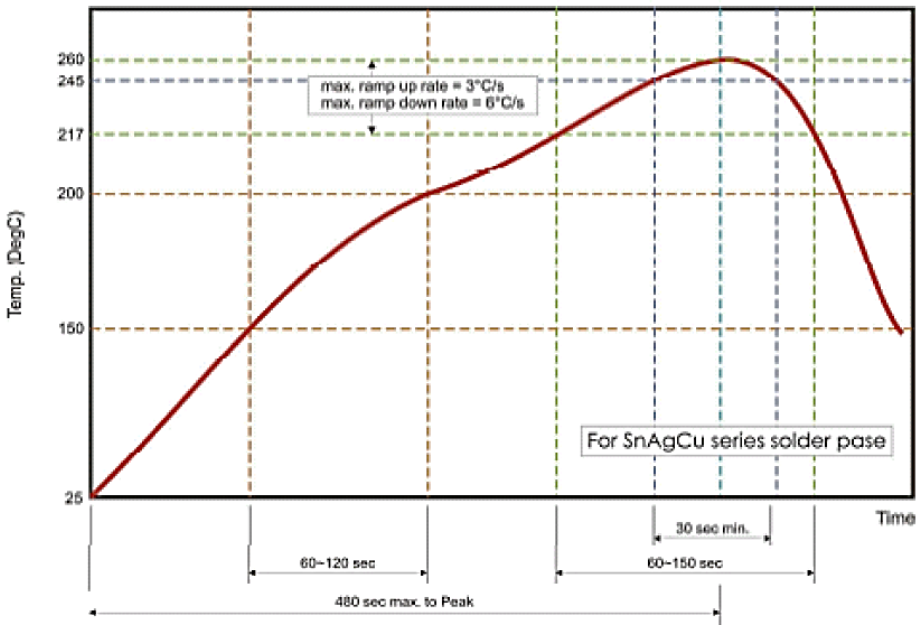

Fig 2. Infrared soldering profile for Chip Resistors

TEST AND REQUIREMENTS

Essentially all tests are carried out according to the schedule of IEC publication 115-8, category **LCT**/**UCT**/56(rated temperature range: **L**ower **C**ategory **T**emperature, **U**pper **C**ategory **T**emperature; damp heat, long term, 56 days). The testing also meets the requirements specified by EIA, EIAJ and JIS. The tests are carried out in accordance with IEC publication 68, "Recommended basic climatic and mechanical robustness testing procedure for electronic components" and under standard atmospheric conditions according to IEC 60068-1, subclause 5.3. Unless otherwise specified, the following value supplied

Temperature: 15 ° C to 35 ° C. Relative humidity: 45% to 75%.

Air pressure: 86kPa to 106 kPa (860 mbar to 1060 mbar).

All soldering tests are performed with midly activated flux.

TEST METHOD AND REQUIREMENT

TEST	PROCEDURE / TEST METHOD	REQUIREMENT	
		Resistor	0Ω
Electrical Characteristics JISC5201-1: 1998 Clause 4.8	- DC resistance values measurement - Temperature Coefficient of Resistance (T.C.R) Natural resistance change per change in degree centigrade. $\frac{R_2 - R_1}{R_1(t_2 - t_1)} \times 10^6$ (ppm/°C) t_1 : 20°C+5°C-1°C; t_2 : -55°C or +155°C R1 : Resistance at reference temperature (20°C+5°C/-1°C) R2 : Resistance at test temperature (-55°C or +155°C)	Within the specified tolerance. Refer to "QUICK REFERENCE DATA"	<50mΩ
Resistance to soldering heat(R.S.H) JISC5201-1:1998 Clause 4.18	Un-mounted chips completely immersed for 10±1 second in a SAC solder bath at 260°C±5ºC	5%: ΔR/Rmax. ±(1%+0.05Ω) 1%: ΔR/Rmax. ±(0.5%+0.05Ω) no visible damage	<50mΩ
Solderability JISC5201-1: 1998 Clause 4.17	Un-mounted chips completely immersed for 2±0.5 second in a SAC solder bath at 235°C±5°C	95% coverage min., good tinning and no visible damage	
Temperature cycling JISC5201-1: 1998 Clause 4.19	30 minutes at -55°C±3°C, 2~3 minutes at 20°C+5°C-1°C, 30 minutes at +155° C±3°C, 2~3 minutes at 20°C+5°C-1°C, total 5 continuous cycles	5%: ΔR/Rmax. ±(1%+0.05Ω) 1%: ΔR/Rmax. ±(0.5%+0.05Ω) no visible damage	<50mΩ
High Temperature Exposure MIL-STD-202 method 108	1000+48/-0 hours; without load in a temperature chamber controlled 155±3°C	5%: ΔR/Rmax. ±(2%+0.1Ω) 1%: ΔR/Rmax. ±(1%+0.1Ω) no visible damage	<50mΩ
Bending strength JISC5201-1: 1998 Clause 4.33	Resistors mounted on a 90mm glass epoxy resin PCB(FR4), bending once 3mm for 10sec, 5mm for CR02	5%: ΔR/Rmax. ±(1%+0.05Ω) 1%: ΔR/Rmax. ±(1%+0.05Ω) no visible damage	<50mΩ

TEST METHOD AND REQUIREMENT

TEST	PROCEDURE / TEST METHOD	REQUIREMENT	
		Resistor	0Ω
Adhesion JISC5201-1: 1998 Clause 4.32	Pressurizing force: 5N, Test time: 10±1sec.	No remarkable damage or removal of the terminations	
Short Time Overload (STOL) JISC5201-1: 1998 Clause 4.13	2.5 times RCWV or max. overload voltage, for 5seconds	5%: ΔR/Rmax. ±(2%+0.05Ω) 1%: ΔR/Rmax. ±(1%+0.05Ω) no visible damage	<50mΩ
Load life in Humidity JISC5201-1: 1998 Clause 4.24	1000 +48/-0 hours, loaded with RCWV or Vmax in humidity chamber controller at 40℃±2℃ and 90~95% relative humidity, 1.5hours on and 0.5 hours off	5%: ΔR/Rmax. ±(2%+0.1Ω) 1%: ΔR/Rmax. ±(1%+0.1Ω) no visible damage	<50mΩ
Load life (endurance) JISC5201-1: 1998 Clause 4.25	1000 +48/-0 hours, loaded with RCWV or Vmax in chamber controller 70±2ºC, 1.5 hours on and 0.5 hours off	5%: ΔR/Rmax. ±(3%+0.1Ω) 1%: ΔR/Rmax. ±(1%+0.1Ω) no visible damage	<50mΩ
Insulation Resistance JISC5201-1: 1998 Clause 4.6	Apply the maximum overload voltage (DC) for 1minute	R≧10GΩ	
Dielectric Withstand Voltage JISC5201-1: 1998 Clause 4.7	Apply the maximum overload voltage (AC) for 1 minute	No breakdown or flashover	

REEL DIMENSION (Unit: mm)

7”: 5,000Ppcs/Reel

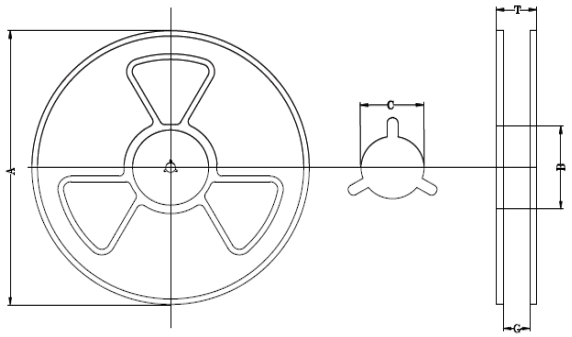

Code	Dimension 7”	Dimension 10”	Dimension 13”
A	**178.0+/-2.0**	254.0+/-2.0	33.0+/-2.0
B	**60.0 +/-1.0**	100 +/-1.0	100+/-1.0
C	**13.0+/-0.20**	13.0+/-0.20	13.0+/-0.20
T	**9.0+/-0.50**	9.0+/-0.5	9.0+/-0.5

TAPE DIMENSION (Unit: mm)

Paper Tape

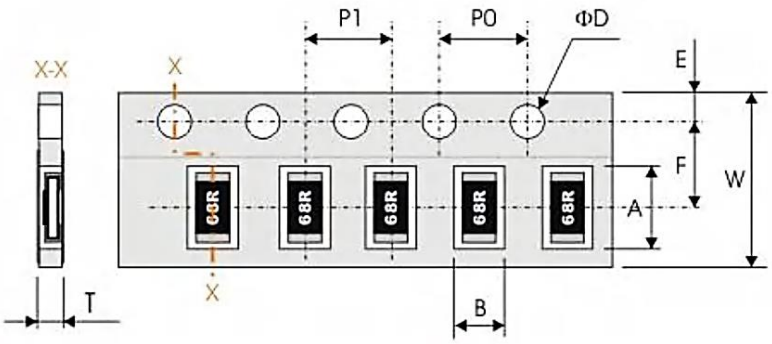

Code	Dimension
A	3.60+/-0.20
B	2.00+/-0.20
T	1.0 Max
W	8.00+/-0.30
P 0	4.00+/-0.10
P 1	4.00+/-0. 10
ØD	1.50+/-0.10
E	1.75+/-0.10
F	3.50+/-0.20

PEEL FORCE OF TOP COVER TAPE

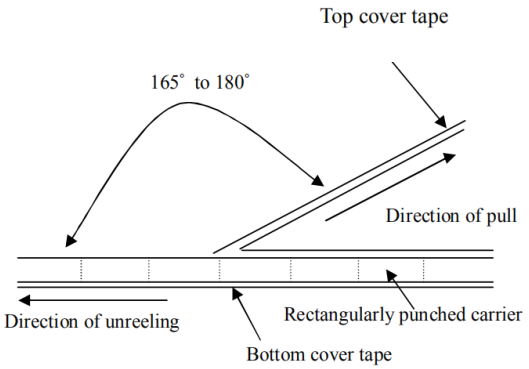

Note: Unless otherwise specified, the peel force of top cover tape shall be 10.2 to 71.4 g f when the top cover tape is pulled at a speed of 300mm/min with the angle between the taped during peel and the direction of unreeling maintained at 165 to 180°as illustrated in Fig.

DISCLAIMER

NextGen Component, Inc. reserves the right to make changes to the product(s) and or information contained herein without notice. No liability is assumed as a result of their use or application. No rights under any patent accompany the sale of any such product(s) or information